Digital Design

B.C.S. - II

Deccan Education Society's

WILLINGDON COLLEGE, SANGLI

Mr. V. S. PATIL M.Sc. (Electronics) NET

vspatil.bcs@gmail.com

DEPARTMENT OF B.C.S.

2-Bit Comparator

- ✓ Compares two binary numbers
- ✓ Each of two bits
- ✓ Produces result such as -

One number is Equal to / Greater than / Less than the other

Block Diagram (Two-bit comparator) :

Number A = A1 A0
and
Number B = B1 B0

Produces 3 outputs as -
G -- (G = 1 if A>B)
E -- (E = 1, if A = B)
L -- (L = 1 if A<B)

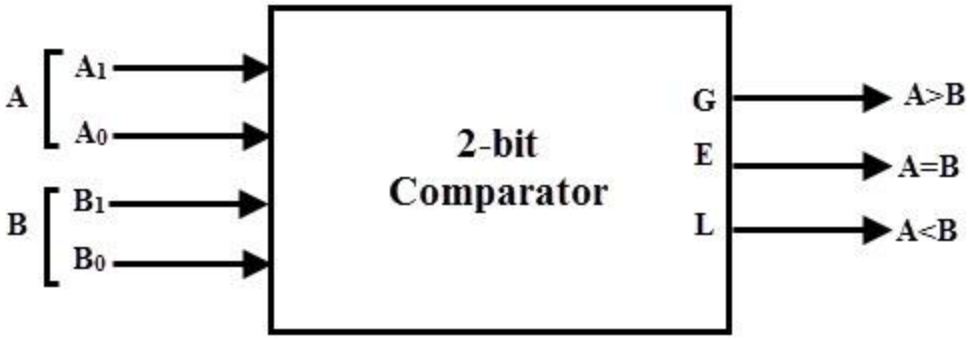

2-Bit Comparator

Truth Table -

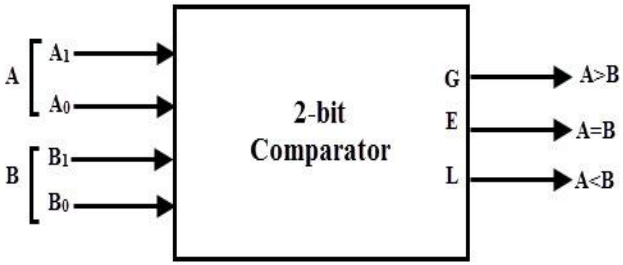

INPUTS				OUTPUTS		
A1	A0	B1	B0	A>B	A=B	A<B
0	0	0	0	0	1	0
0	0	0	1	0	0	1
0	0	1	0	0	0	1
0	0	1	1	0	0	1
0	1	0	0	1	0	0
0	1	0	1	0	1	0
0	1	1	0	0	0	1
0	1	1	1	0	0	1
1	0	0	0	1	0	0
1	0	0	1	1	0	0
1	0	1	0	0	1	0
1	0	1	1	0	0	1
1	1	0	0	1	0	0
1	1	0	1	1	0	0
1	1	1	0	1	0	0
1	1	1	1	0	1	0

2-Bit Comparator

K-MAP for E (A=B)

A1A0 \ B1B0	00	01	11	10
00	1	0	0	0
01	0	1	0	0
11	0	0	1	0
10	0	0	0	1

$$A = B: E = \overline{A1}\ \overline{A0}\ \overline{B1}\ \overline{B0} + \overline{A1}\ A0\ \overline{B1}\ B0 + A1\ A0\ B1\ B0 + A1\ \overline{A0}\ B1\ \overline{B0}$$

$$= \overline{A1}\ \overline{B1}\ (\overline{A0}\ \overline{B0} + A0\ B0) + A1\ B1\ (A0\ B0 + \overline{A0}\ \overline{B0})$$

$$= (A0\ B0 + \overline{A0}\ \overline{B0})\ (A1\ B1 + \overline{A1}\ \overline{B1})$$

$$= (A0 \text{ Ex-NOR } B0)\ (A1 \text{ Ex-NOR } B1)$$

$$(\overline{A0 \oplus B0}) \quad (\overline{A1 \oplus B1})$$

INPUTS				O/P
A1	A0	B1	B0	A=B
0	0	0	0	1
0	0	0	1	0
0	0	1	0	0
0	0	1	1	0
0	1	0	0	0
0	1	0	1	1
0	1	1	0	0
0	1	1	1	0
1	0	0	0	0
1	0	0	1	0
1	0	1	0	1
1	0	1	1	0
1	1	0	0	0
1	1	0	1	0
1	1	1	0	0
1	1	1	1	1

2-Bit Comparator

K-MAP for G (A>B)

A1A0 \ B1B0	00	01	11	10
00	0	0	0	0
01	1	0	0	0
11	1	1	0	1
10	1	1	0	0

$$A>B:\ G = A0\,\overline{B1}\ \ \overline{B0} + A1\,\overline{B1} + A1\ A0\,\overline{B0}$$

INPUTS				O/P
A1	A0	B1	B0	A>B
0	0	0	0	**0**
0	0	0	1	**0**
0	0	1	0	**0**
0	0	1	1	**0**
0	1	0	0	**1**
0	1	0	1	**0**
0	1	1	0	**0**
0	1	1	1	**0**
1	0	0	0	**1**
1	0	0	1	**1**
1	0	1	0	**0**
1	0	1	1	**0**
1	1	0	0	**1**
1	1	0	1	**1**
1	1	1	0	**1**
1	1	1	1	**0**

2-Bit Comparator

K-MAP for L (A<B)

A1A0 \ B1B0	00	01	11	10
00	0	1	1	1
01	0	0	1	1
11	0	0	0	0
10	0	0	1	0

$$A < B: L = \overline{A1}\ B1 + \overline{A0}\ B1\ B0 + \overline{A1}\ \overline{A0}\ B0$$

INPUTS				O/P
A1	A0	B1	B0	A<B
0	0	0	0	**0**
0	0	0	1	**1**
0	0	1	0	**1**
0	0	1	1	**1**
0	1	0	0	**0**
0	1	0	1	**0**
0	1	1	0	**1**
0	1	1	1	**1**
1	0	0	0	**0**
1	0	0	1	**0**
1	0	1	0	**0**
1	0	1	1	**1**
1	1	0	0	**0**
1	1	0	1	**0**
1	1	1	0	**0**
1	1	1	1	**0**

2-Bit Comparator

Logic Equations & Logic Diagram

$$A>B:\ G = A0\,\overline{B1}\ \overline{B0} + A1\,\overline{B1} + A1\ A0\,\overline{B0}$$

$$A=B:\ E = \overline{(A0 \oplus B0)}\ \overline{(A1 \oplus B1)}$$

$$A<B:\ L = \overline{A1}\ B1 + \overline{A0}\,B1\,B0 + \overline{A1}\ \overline{A0}\,B0$$

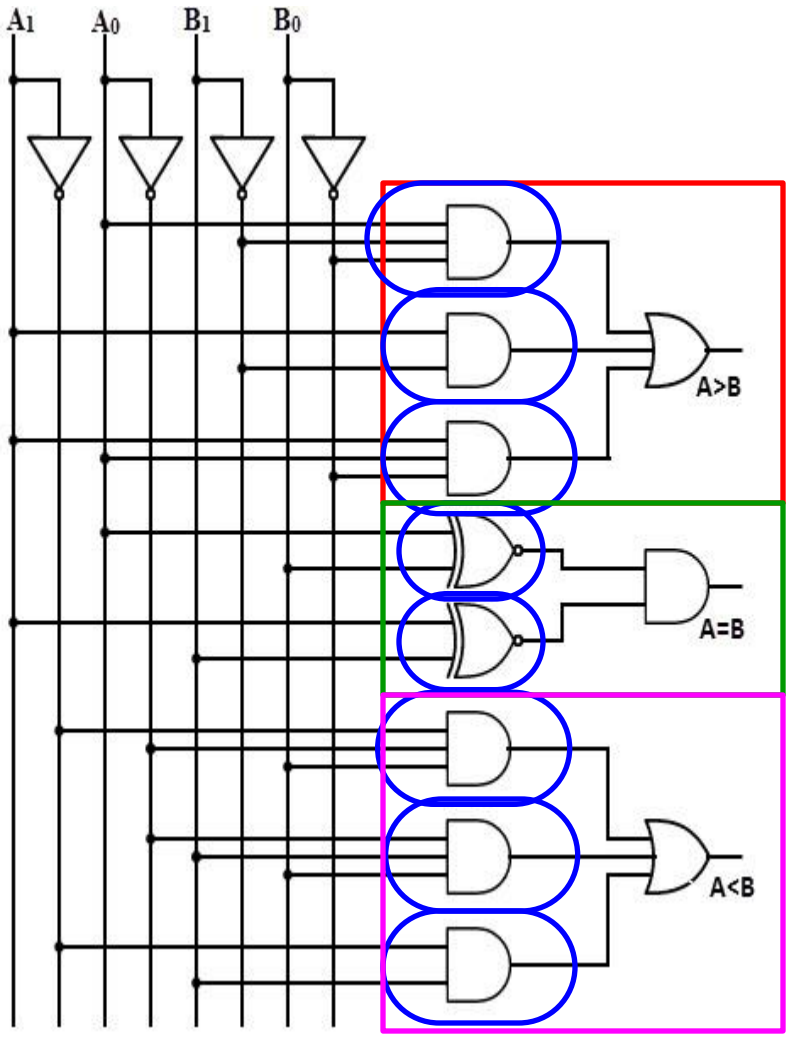

2-Bit Comparator

$$A>B:\ G = A0\,\overline{B1}\ \ \overline{B0} + A1\,\overline{B1} + A1\ A0\,\overline{B0}$$

$$A = B:\ E = \overline{A1}\ \ \overline{A0}\ \overline{B1}\ \ \overline{B0} + \overline{A1}\ A0\ \ \overline{B1}\ B0 + A1\ A0\ B1\ B0 + A1\,\overline{A0}\ B1\ \overline{B0}$$

$$= \overline{A1}\ \ \overline{B1}\ (\overline{A0}\ \ \overline{B0} + A0\,B0) + A1\ B1\ (A0\,B0 + \overline{A0}\ \ \overline{B0}\ )$$

$$= (A0\,B0 + \overline{A0}\ \ \overline{B0})\ (A1\ B1 + \ \overline{A1}\ \ \overline{B1})$$

$$= (A0 \text{ Ex-NOR } B0)\ (A1 \text{ Ex-NOR } B1)$$

$$A < B:\ L = \overline{A1}\ \ B1 + \overline{A0}\ B1\ B0 + \overline{A1}\ \ \overline{A0}\ B0$$